PT SAPTAINDRA SEJATI

POWER MODULE RECEIVING INSPECTION CHECKSHEET

MACHINE MODEL

D155A-6

RO NO :

POWERTRAIN SECTION

PT.SAPTA INDRA SEJATI
PLANT REBUILD CENTER

RECIVING CHECK SHEET	WO. NO		DOCUMENT NO	
POWER MODUL	CODE UNIT		PUBLIC DATE	
	INSPECTION DATE		REVISION NO	
D 155A - 6	JOB SITE		PAGE	

✓ : GOOD CONDITION X : BAD CONDITION ⊗ : NONE

SKETCH DRAWING OR PHOTOES

Right Side View

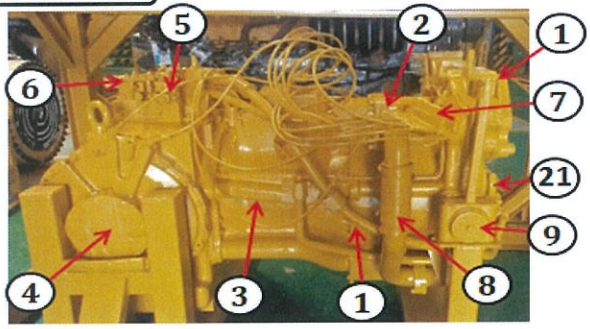

Left Side View

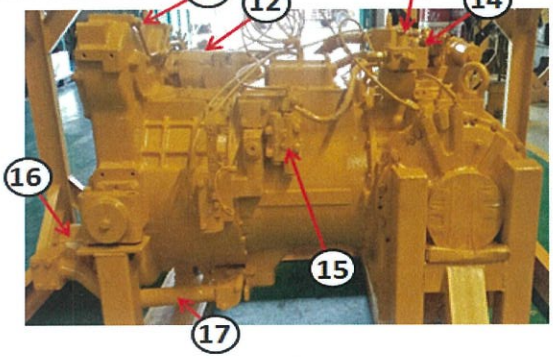

Rear Side View

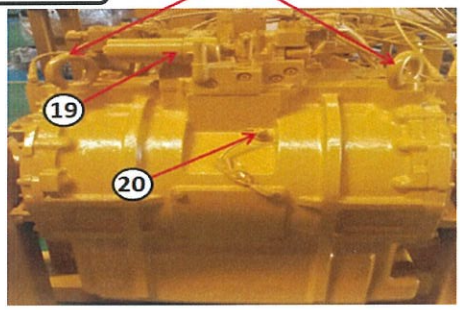

NOTE : PLEASE MARK " ✓ " FOLLOWING TO THE ACTUAL CONDITION

OIL LEVEL	EMPTY OR DRAINED	
	PROPER LEVEL	

NO	ITEM	CHECK	REMARK
1	PTO		
2	Torque Conventer		
3	Transmission		
4	Steering Brake RH & LH		
5	Sudden Brake Valve		
6	ECMV Brake		
7	Centralized Pick Up Port		
8	Piping & Hose Suction Pump		
9	Front Support		
10	Piping Supply		
11	Piping Lubrication PTO		
12	Power Train Pump		
13	Block Divider		
14	Steering ECMV		
15	Main Relief		
16	Scavenging Pump Assy		
17	Scavenging piping		
18	Lift Hanger (3pcs)		
19	Filter With Element Assy		
	Steering Brake		
20	Revolution Sensor		
21	Coupling		
	Warning (Sticker)		
	Painting condition		
	Packing / wraping		
	Stand		
	Bolt stand		
	Name plate		
	Comp.S/N		

Note :

INSPECTION BY	CHECK BY	CHECK BY	APPROVED BY
QA INSPECTOR	QA COORDINATOR	GL/SPV PROD	PPC

PT SAPTAINDRA SEJATI

TORQUE CONVERTER

VISUAL & MEASUREMENT

CHECKSHEET

MACHINE MODEL

D155A-6

RO NO :

POWERTRAIN SECTION

PT SAPTAINDRA SEJATI

TRANSMISSION

VISUAL & MEASUREMENT

CHECKSHEET

MACHINE MODEL

D155A-6

RO NO :

POWERTRAIN SECTION

PT.SAPTA INDRA SEJATI
PLANT REBUILD CENTER

VISUAL & MEASUREMENT CHECK SHEET TORQUE CONVERTER D 155A - 6	WO NUMBER		DOCUMENT NO	
	COMP.MODEL		PUBLIC DATE	
	COMP.S/N		REVISION NO	
	UNIT CODE		PAGE	1 of 9

PROCESS	START		INSPECTION BY		
	FINISH				

NO	PART TO BE INSPECTED	CHECKING POINT	SKECTH DRAWING OR PHOTOES	VISUAL CHECK & MEASUREMENT
1	Pto cover & shaft	Matting face Bearing fitting portion O-ring groove snap ring groove ***Seal contact size*** ***Dept : std ≤ 0.1mm*** ***Widt : std ≤ 0.5 mm***	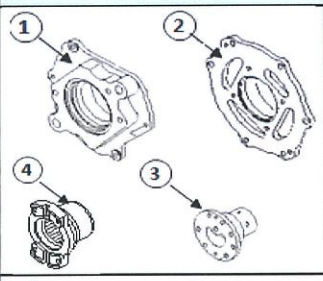	Contens: Normal, Crack, Scratch, Broken, Abn wear 1 2 3 4 U/A U/R R/N 1 2 3 4 ***Remark :***
2	Pto Gear	Bearing fitting portion snap ring groove Internal spline teeth External gear teeth ***Spline teeth wear max depth ≤ 0.35 mm***	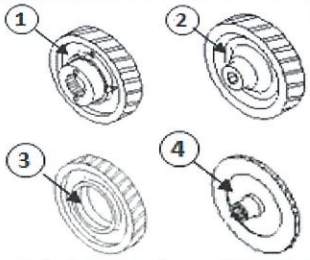	Contens: Normal, Crack, Scratch, Broken, Abn wear 1 2 3 4 U/A U/R R/N 1 2 3 4 ***Remark :***
3	Case	Bearing fitting portion snap ring groove O-ring groove Matting face	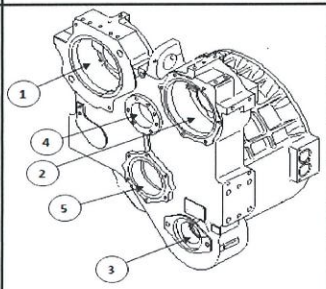	Contens: Normal, Crack, Scratch, Broken, Abn wear 1 2 3 4 5 U/A U/R R/N ***Remark :***
4	Impeler	Retainer fitting portion Matting face All round Bearing fitting portion Seal ring fitting portion	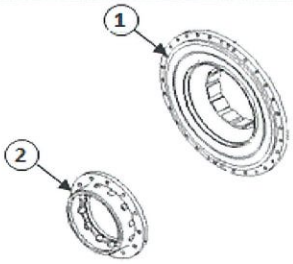	Contens: Normal, Crack, Scratch, Broken, Abn wear 1 2 U/A U/R R/N 1 2 ***Remark :***
5	Staror shaft ,stator & stator race	Bearing fitting portion Seal ring groove Internal spline teeth External spline teeth Matting face Contact surface snap ring groove	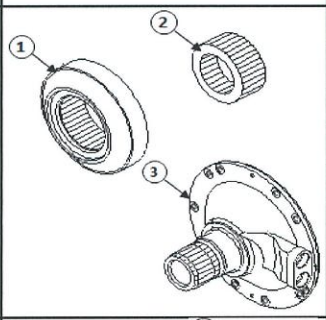	Contens: Normal, Crack, Scratch, Broken, Abn wear 1 2 3 U/A U/R R/N 1 2 3 ***Remark :***
6	Case & turbin	Bearing fitting portion Matting face snap ring groove All round External spline teeth External gear teeth	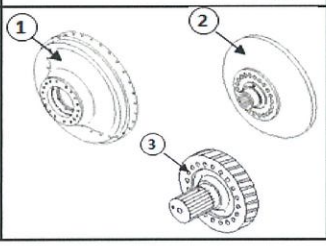	Contens: Normal, Crack, Scratch, Broken, Abn wear 1 2 3 U/A U/R R/N 1 2 3 ***Remark :***

PT.SAPTA INDRA SEJATI
PLANT REBUILD CENTER

VISUAL & MEASUREMENT CHECK SHEET **TRANSMISI** D 155A - 6	WO NUMBER		DOCUMENT NO	
	COMP.MODEL		PUBLIC DATE	
	COMP.S/N		REVISION NO	
	UNIT CODE		PAGE	2 of 9

PROCESS	START		INSPECTION BY		
	FINISH				

NO	PART NAME	CHECKING POINT	SKECTH DRAWING OR PHOTOES	VISUAL CHECK & MEASUREMENT	DECISION U/A	U/R	R/N
1	Shaft	Bearing contact surface Seal ring contact surface snap ring groove spline portion	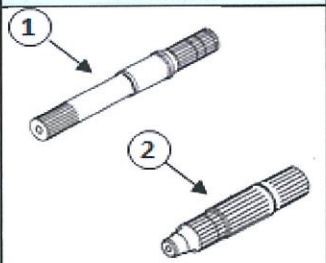	Contens: 1, 2 Normal Crack Scoring Broken Abn wear *Remark :*	1 2		
2	Sun Gear	Side contact portion internal spline external gear all round	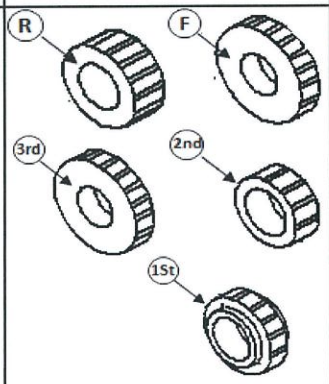	Contens: F, R, 1st, 2nd, 3rd Normal Crack Breakage Abn wear *Remark :*	F R 1st 2nd 3rd		
3	Carrier Forward assembly	Matting face Bearing fitting portion External gear teeth Seal ring contact surface All round Trust washer fitting portion	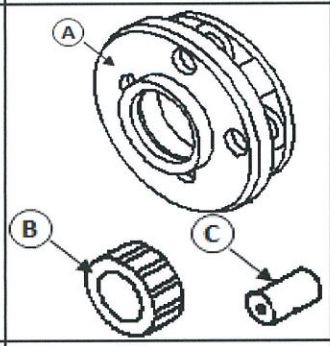	Contens: A, B, C Normal Crack Scratch Broken Abn wear *Remark :*	A B C		
4	Carrier reverse assembly	Matting face Bearing fitting portion External gear teeth Seal ring contact surface All round Trust washer fitting portion	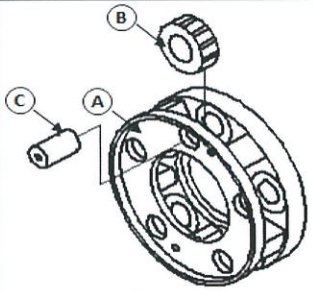	Contens: A, B, C Normal Crack Scratch Broken Abn wear *Remark :*	A B C		
5	3rd Carrier assembly	Matting face Bearing fitting portion External gear teeth Seal ring contact surface All round Trust washer fitting portion	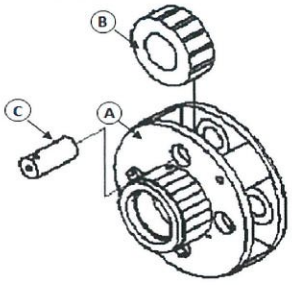	Contens: A, B, C Normal Crack Scratch Broken Abn wear *Remark :*	A B C		

PT.SAPTA INDRA SEJATI
PLANT REBUILD CENTER

VISUAL & MEASUREMENT CHECK SHEET **TRANSMISI** D 155A - 6	WO NUMBER		DOCUMENT NO	
	COMP.MODEL		PUBLIC DATE	
	COMP.S/N		REVISION NO	
	UNIT CODE		PAGE	3 of 9

PROCESS	START		INSPECTION BY		
	FINISH				

NO	PART NAME	CHECKING POINT	SKECTH DRAWING OR PHOTOES	VISUAL CHECK & MEASUREMENT	DECISION U/A	U/R	R/N
6	2nd Carrier assembly	Matting face Bearing fitting portion External gear teeth Seal ring contact surface All round Trust washer fitting portion	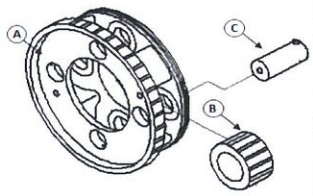	Contens: A, B, C Normal Crack Scratch Broken Abn wear Remark :	A B C		
7	1st carrier assembly	Matting face Bearing fitting portion External gear teeth Seal ring contact surface All round Trust washer fitting portion	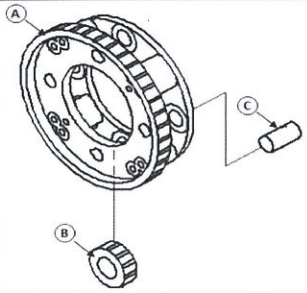	Contens: A, B, C Normal Crack Scratch Broken Abn wear Remark :	A B C		
8	Ring Gear	Side contact portion Internal Gear teeth External spline teeth All round	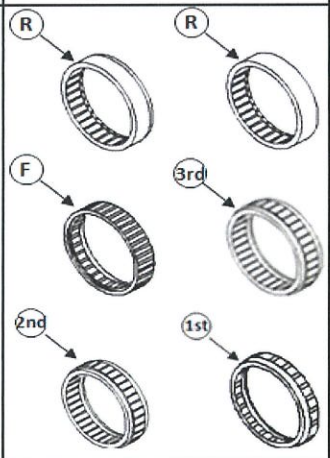	Contens: F, R, 1st, 2nd, 3rd Normal Crack Breakage Abn wear Remark :	F R 1st 2nd 3rd	U/A U/R R/N	
9	Housing	Bearing fitting portion Matting face Seal ring contact surface snap ring groove Disc contact surface	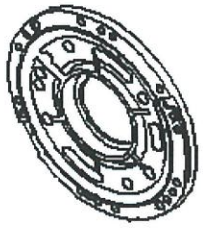	Contens: Act Normal Crack Scratch Broken Abn wear Remark :			
10	Housing & Piston Reverse	seal contact surface Disc contact surface pin hole All round	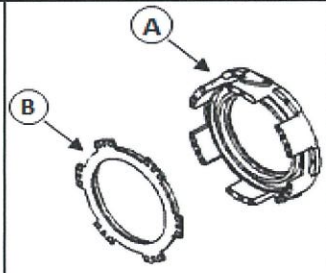	Contens: A, B Normal Crack Scratch Broken Abn wear Remark :	A B		

PT.SAPTA INDRA SEJATI
PLANT REBUILD CENTER

VISUAL & MEASUREMENT CHECK SHEET **TRANSMISI** D 155A - 6	WO NUMBER		DOCUMENT NO	
	COMP.MODEL		PUBLIC DATE	
	COMP.S/N		REVISION NO	
	UNIT CODE		PAGE	4 of 9

PROCESS	START		INSPECTION BY		
	FINISH				

NO	PART NAME	CHECKING POINT	SKECTH DRAWING OR PHOTOES	VISUAL CHECK & MEASUREMENT	DECISION U/A	U/R	R/N
11	Housing & Piston Forward	seal contact surface Disc contact surface pin hole All round	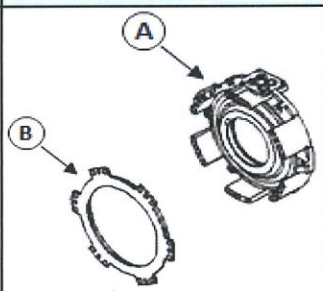	Contens: A, B Normal Crack Scratch Broken Abn wear *Remark :*	A B		
	Hosing & Piston 3 rd	seal contact surface Disc contact surface pin hole All round	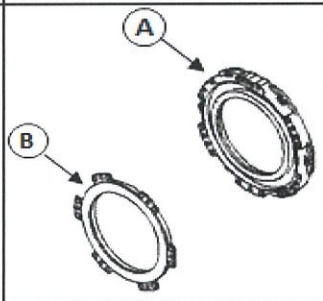	Contens: A, B Normal Crack Scratch Broken Abn wear *Remark :*	A B		
13	Housing & Piston 2nd	seal contact surface Disc contact surface pin hole All round	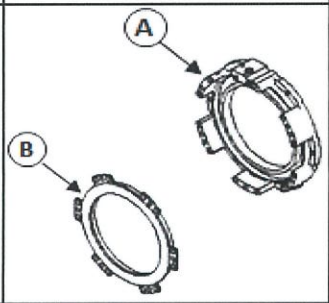	Contens: A, B Normal Crack Scratch Broken Abn wear *Remark :*	A B		
	Housing & Piston 1st	seal contact surface Disc contact surface pin hole All round	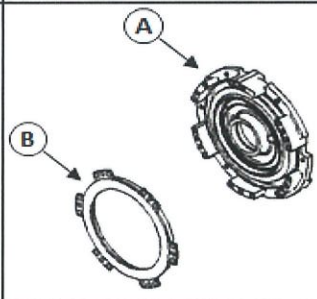	Contens: A, B Normal Crack Scratch Broken Abn wear *Remark :*	A B		
15	main housing	O-ring groove Matting face oil galery Treath portion	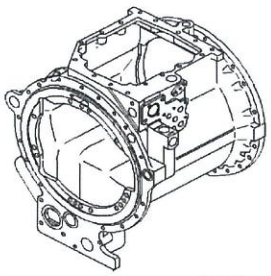	Contens: A Normal Crack Scratch Broken Abn wear *Remark :*			

PT.SAPTA INDRA SEJATI
PLANT REBUILD CENTER

VISUAL & MEASUREMENT CHECK SHEET **TRANSMISI** D 155A - 6	WO NUMBER		DOCUMENT NO	
	COMP.MODEL		PUBLIC DATE	
	COMP.S/N		REVISION NO	
	UNIT CODE		PAGE	5 of 9

PROCESS	START		INSPECTION BY		
	FINISH				

NO	PART NAME	CHECKING POINT	SKECTH DRAWING OR PHOTOES	VISUAL CHECK & MEASUREMENT
16	Spring Clutch	unit : mm clutch / standart / limit Reverse 81.7 76.8 Forward 81.7 76.8 3rd 70 65.8 2nd 70 65.8 1st 66 62	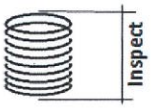	R F 3rd 2nd 1st *Remark :*
17	Plate	Unit :mm Clutch / standart / tolerance Reverse 3.2 ±0.1 Forward 3.2 ±0.1 3rd 3.2 ±0.1 2nd 3.2 ±0.1 1st 3.2 ±0.1	· Plate wear 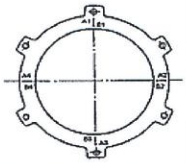 · Plate torque pin hole wear and fatigue 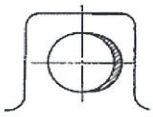	1 2 3 4 5 6 R F 3rd 2nd 1st *Remark :*

Note

INSPECTION BY **APPROVED BY**

MECHANIC **GL /QA**

PT.SAPTA INDRA SEJATI
PLANT REBUILD CENTER

VISUAL & MEASUREMENT CHECK SHEET BEVEL & STEERING BRAKE D 155A - 6	WO NUMBER		DOCUMENT NO	
	COMP.MODEL		PUBLIC DATE	
	COMP.S/N		REVISION NO	
	UNIT CODE		PAGE	6 of 9

PROCESS	START		INSPECTION BY		
	FINISH				

NO	PART NAME	CHECKING POINT	SKECTH DRAWING OR PHOTOES	VISUAL CHECK & MEASUREMENT	DECISION U/A	U/R	R/N
1	Cage & Pinion Shaft	Bearing fitting portion Internal spline teeth External Gear teeth Matting face All round	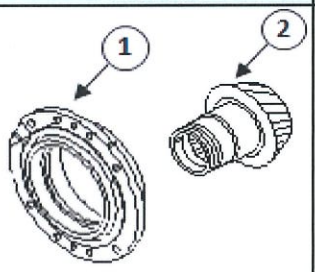	Contens: 1, 2 Normal Crack Scratch Broken Abn wear *Remark :*	1 2		
	Shaft & Bevel Gear	Bearing fitting portion External Gear teeth Matting face External spline teeth All round	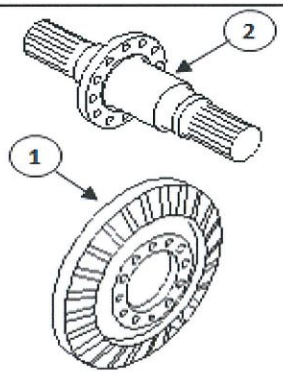	Contens: 1, 2 Normal Crack Scratch Broken Abn wear	1 2		
3	Cage	Bearing fitting portion Matting face All round	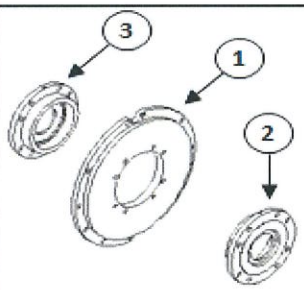	Contens: 1, 2, 3 Normal Crack Scratch Broken Abn wear *Remark :*	1 2 3		
4	Case (Brake)	Bearing fitting portion Matting face O-Ring groove Thread fitting portion Sleeve fitting portion Oil galery All round	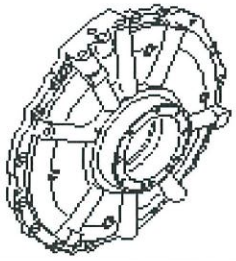	Contens: RH, LH Normal Crack Scratch Broken Abn wear *Remark :*	RH LH		
5	Drum (Brake)	Matting face Internal spline teeth Disc contact surface O-Ring groove All round	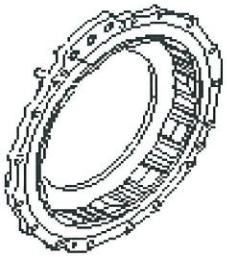	Contens: RH, LH Normal Crack Scratch Broken Abn wear *Remark :*	RH LH		

PT.SAPTA INDRA SEJATI
PLANT REBUILD CENTER

VISUAL & MEASUREMENT CHECK SHEET BEVEL & STEERING BRAKE D 155A - 6	WO NUMBER		DOCUMENT NO	
	COMP.MODEL		PUBLIC DATE	
	COMP.S/N		REVISION NO	
	UNIT CODE		PAGE	7 of 9

PROCESS	START		INSPECTION BY		
	FINISH				

NO	PART NAME	CHECKING POINT	SKECTH DRAWING OR PHOTOES	VISUAL CHECK & MEASUREMENT	DECISION U/A	U/R	R/N
6	Spring (Brake)	Matting face Side contact surface All round	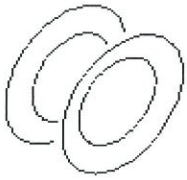	Contens / RH / LH Normal Crack Scratch Broken Abn wear *Remark :*	RH LH		
7	Hub (Brake)	Bearing fitting portion Matting face O-Ring groove Thread fitting portion Internal apline teeth Oil galery All round		Contens / RH / LH Normal Crack Scratch Broken Abn wear *Remark :*	RH LH		
8	Cylinder (Brake)	Bearing fitting portion Matting face O-Ring & seal groove Thread fitting portion Oil galery Ring contact surface ***Seal contact surface*** Standart / limit		Contens / RH / LH Normal Crack Scratch Broken Abn wear *Remark :* ***Ring contact surface*** x / y Rh Lh	RH LH		
	Piston (Brake)	Seal ring contact surface External Gear teeth Disc contact surface All round		Contens / RH / LH Normal Crack Scratch Broken Abn wear *Remark :*	RH LH		
10	Drum (Steering Clutch)	Matting face Internal spline teeth Disc contact surface O-Ring groove All round	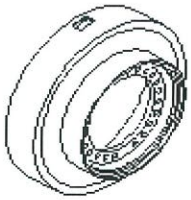	Contens / RH / LH Normal Crack Scratch Broken Abn wear *Remark :*	RH LH		

PT.SAPTA INDRA SEJATI
PLANT REBUILD CENTER

VISUAL & MEASUREMENT CHECK SHEET BEVEL & STEERING BRAKE D 155A - 6	WO NUMBER		DOCUMENT NO	
	COMP.MODEL		PUBLIC DATE	
	COMP.S/N		REVISION NO	
	UNIT CODE		PAGE	8 of 9

PROCESS	START		INSPECTION BY		
	FINISH				

NO	PART NAME	CHECKING POINT	SKECTH DRAWING OR PHOTOES	VISUAL CHECK & MEASUREMENT	DECISION U/A	U/R	R/N
11	Cylinder (Steering clutch)	Bearing fitting portion Matting face O-Ring groove Thread fitting portion Oil galery Seal groove Ring contact surface		Contens / RH / LH Normal Crack Scratch Broken Abn wear *Remark :*	RH LH		
	Piston (Steering clutch)	Seal ring contact surface External Gear teeth Disc contact surface All round		Contens / RH / LH Normal Crack Scratch Broken Abn wear *Remark :*	RH LH		
13	Spring (Steering clutch)	Matting face Side contact surface All round	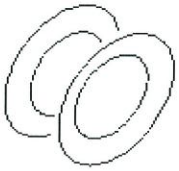	Contens / RH / LH Normal Crack Scratch Broken Abn wear *Remark :*	RH LH		
	Hub (steering clutch)	Bearing fitting portion External spline teeth Snap ring groove Internal spline teeth All round		Contens / RH / LH Normal Crack Scratch Broken Abn wear *Remark :*	RH LH		
15	Stopper (steering clutch)	Matting Face Disc contact surface All round	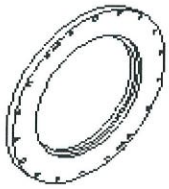	Contens / RH / LH Normal Crack Scratch Broken Abn wear *Remark :*	RH LH		

PT.SAPTA INDRA SEJATI
PLANT REBUILD CENTER

VISUAL & MEASUREMENT CHECK SHEET BEVEL & STEERING BRAKE D 155A - 6	WO NUMBER		DOCUMENT NO	
	COMP.MODEL		PUBLIC DATE	
	COMP.S/N		REVISION NO	
	UNIT CODE		PAGE	9 of 9

PROCESS	START		INSPECTION BY		
	FINISH				

NO	PART NAME	CHECKING POINT	SKECTH DRAWING OR PHOTOES	VISUAL CHECK & MEASUREMENT	DECISION U/A	U/R	R/N
16	Housing	O-ring Groove Oil galery Contact surface Treath potion All round	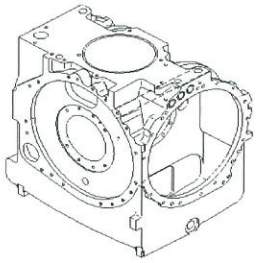	Contens / Act Normal Crack Scratch Broken Abn wear *Remark :*			
17	Steering & Brake Plate	Disc contact surface External gear teeth ***Steering Brake Plate*** ***Standart*** 2,9 / ***Repair Limit*** 2,6 ***Steering Clutch Plate*** ***Standart*** 2,9 / ***Repair Limit*** 2,6	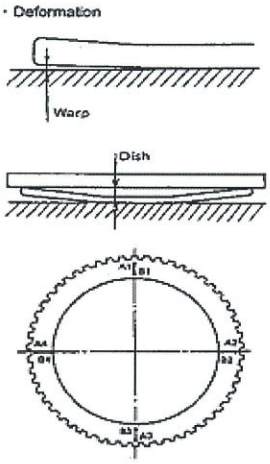	***Steering Brake Plate*** ***Steering Clutch Plate*** *Remark :*			

Steering Brake Plate	1	2	3	4	5
RH					
LH					

Steering Clutch Plate	1	2	3	4	5
RH					
LH					

Note:

INSPECTION BY

MECHANIC

APPROVED BY

GL /QA

PT SAPTAINDRA SEJATI

POWER TAKE OFF ASSEMBLY CHECKSHEET

MACHINE MODEL

D155A-6

RO NO :

POWERTRAIN SECTION

PT.SAPTA INDRA SEJATI
PLANT REBUILD CENTER

ASSEMBLY CHECK SHEET	WO NUMBER		DOCUMENT NO	RC/QR04/PT/12/05
PTO	COMP.MODEL		PUBLIC DATE	04/01/2019
	COMP.S/N		REVISION NO	
D 155A-6	UNIT MODEL		PAGE	

PROCESS	START		ASSEMBLY BY		
	FINISH				

NO	PART TO INSTALL OR ASSEMBLY	CONDITION TOBE INSTALL	MECH	GL/QA	SKETCH DRAWING OR PHOTHOES
1	Magnet assembly & Input shaft outer race	**⚠ IMPORTANT ⚠** **a Clean all parts, and check for dirt or damage.** **a After press fitting the bearing, apply 6 cc of SAE10WCD or SAE30CD in drops, then rotate about 10 times.** **a Check that the snap ring is fitted securely in the groove.** • Assemble magnet assembly (33) and spring (32). Than Install cover (31). **Tightening bolt** Standart: 11 ± 1.0 Kgm / Actual: • Press fit input shaft outer race (30), and install snap ring (29).			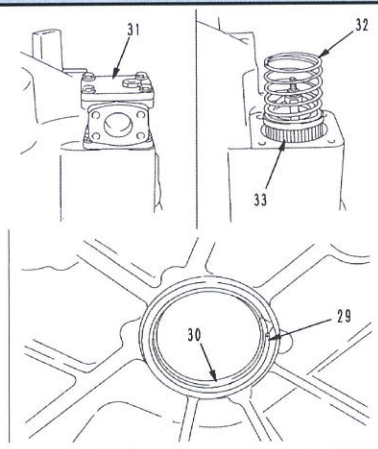
2	Idle Gear	• Fit snap ring (28) to gear (24), and press fit outer race (27). • Using 3 guide bolts [9], insert shaft (23) to position shown in diagram.a If shaft (23) is inserted fully, gear (24) cannot be installed. O-ring : Grease (G2-LI) • Install bearing (25) to shaft (23). And than Install spacer (26). • Install gear (24). Than Fit bearing (25), then tighten plate (22) with bolt and press fit to shaft. **Thread tightener (LT-2)** **Tightening bolt** Standart: 8.25 ± 3.25 Kgm / Actual: • Secure shaft (23) with mounting bolts. **Thread tightener (LT-2)** **Tightening bolt** Standart: 1.25 ± 1.25 Kgm / Actual:			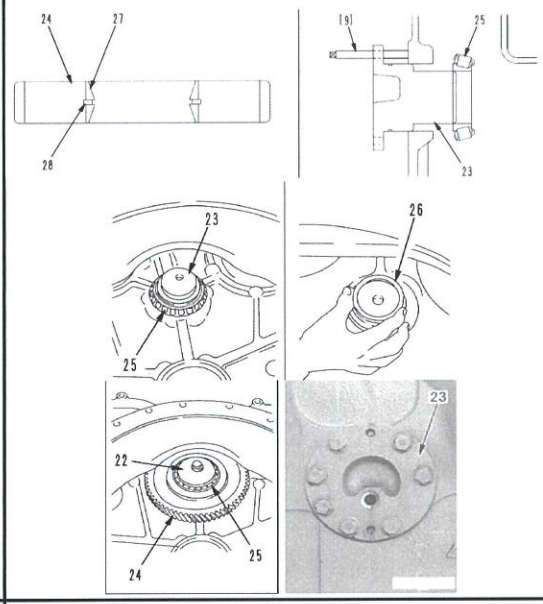
3	Scavenging pump drive gear	• Press fit bearing (20) to case, and install snap ring (37). • Hold inner race end of bearing with push tool [10], and install drive gear (19). • Install snap ring (18).			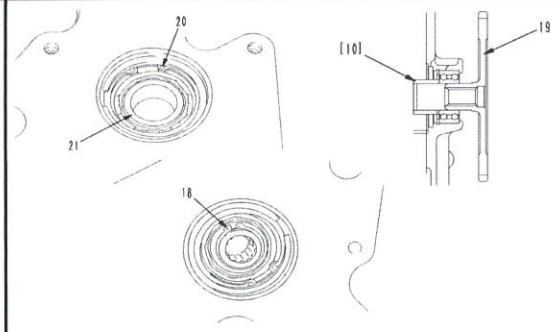
4	Cover assembly	• Press fit bearing (17) to cover assembly, and install snap ring (16). • Press fit inner race (14) to gear assembly (15), and install snap ring (13). • Using push tool [11], press fit cover (12) to gear assembly (11). • Fit spacer (10), and install snap ring (9). • Mesh with idler gear and install cover assembly (8). **O-Ring Grease (G2-L1)** **Tightening bolt** Standart: 1.25 ± 1.25 Kgm / Actual:			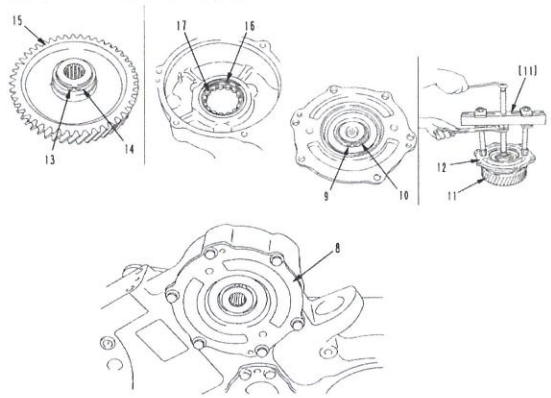

ASSEMBLY CHECK SHEET **PTO** D 155A-6	WO NUMBER		DOCUMENT NO	RC/QR04/PT/12/05
	COMP.MODEL		PUBLIC DATE	04/01/2019
	COMP.S/N		REVISION NO	
	UNIT MODEL		PAGE	

5	HSS pump drive gear, cover assembly	• Press fit bearing (6) to gear (7). • Install gear and bearing assembly (5) to cover (4). • Install gear and cover assembly (3) to case O-Ring Grease (G2-L1) Tightening bolt Standart: 1.25 ± 1.25 Kgm Actual:			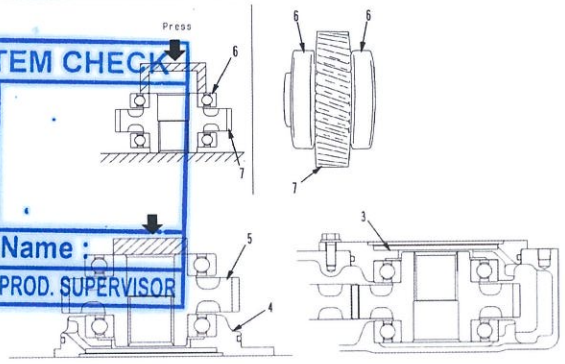
6	Lubrication tube	• Install lubrication tube (2). Tightening joint bolt Standart: 4 ± 0.5 Kgm Actual: • Install lubrication tube (1) Tightening joint bolt Standart: 4 ± 0.5 Kgm Actual:			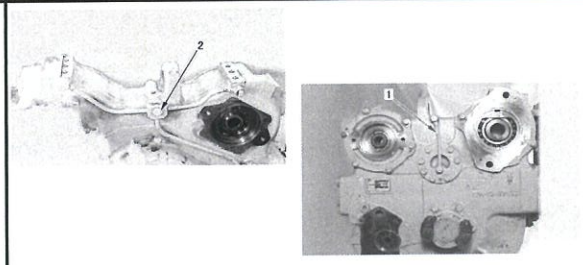

RANDOM ITEM CHECK

Name : QA INSPECTOR

Name : PROD. SUPERVISOR

Note :

INSPECTION BY

MECHANIC

APPROVE BY

GROUP LEADER (GL)

PT SAPTAINDRA SEJATI

TORQUE CONVERTER ASSEMBLY

CHECKSHEET

MACHINE MODEL

D155A-6

RO NO :

POWERTRAIN SECTION

PT.SAPTA INDRA SEJATI
PLANT REBUILD CENTER

ASSEMBLY CHECK SHEET	WO NUMBER		DOCUMENT NO	RC/QR04/PT/01/04
TORQUE CONVERTER	COMP.MODEL		PUBLIC DATE	
	COMP.S/N		REVISION NO	4
D 155A-6	UNIT MODEL		PAGE	

PROCESS	START		ASSEMBLY BY		
	FINISH				

NO	PART TO INSTALL OR ASSEMBLY	CONDITION TOBE INSTALL	MECH	GL/QA	SKETCH DRAWING OR PHOTHOES
1	Pump Assembly	**⚠ IMPORTANT ⚠** **Clean all parts, and check for dirt or damage. a After press fitting the bearing, apply 6 cc of SAE10WCD or SAE30CD in drops, then rotate about 10 times.** **a Check that the snap ring is fitted securely in the groove.** **a Coat the seal ring with grease (G2-LI) and align the end gaps.** **CAUTION !** **Shaft,Retainer,Ring Snap and Spacer was switch replaced part PSN (AT15123)** • Press fit bearing (21) to cage (20), and install snap ring (19). • Install cage assembly (17) to pump (18) **Tightening bolt** Standart: **6.75 ± 0.75 Kgm** / Actual: • Install seal ring (15) and flange (16) to stator shaft (14). **Thread tightener (LT-2)** • **a Push the inner race of the bearing to press fit.** *Simbol A pada bearing harus searah dengan shaft.* **Thread tightener (LT-2)**			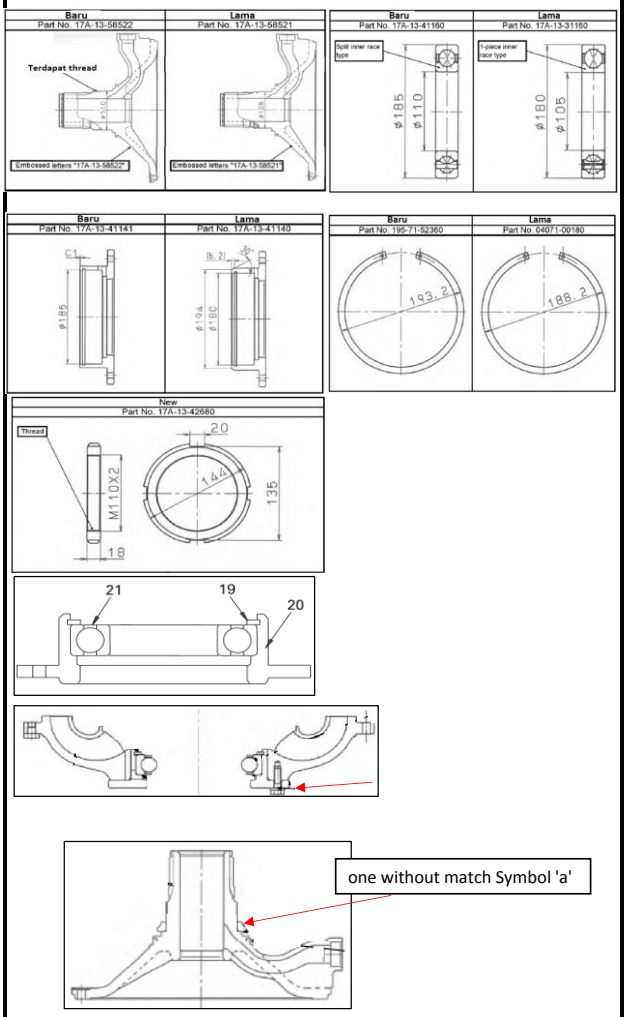
2	Stator shaft Assembly	• Using push tool [4], install pump assembly (13) to stator shaft (14). • After Install drop oil SAE 30 6 cc and rotate 10 turn!			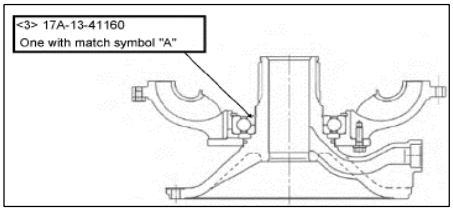

ASSEMBLY CHECK SHEET **TORQUE CONVERTER** D 155A-6	WO NUMBER		DOCUMENT NO	RC/QR04/PT/01/04
	COMP.MODEL		PUBLIC DATE	
	COMP.S/N		REVISION NO	4
	UNIT MODEL		PAGE	

3	**Stator and Pump assembly**	**Thread tightener (LT-2) tread of the shaft** • Install nut (m110 x2) **Tightening bolt** • Standart: **60 - 65 Kgm** / Actual: • Install Snap ring (04064-01030) • Install race(17A-13-52130) and snaprings (2 pieces) to stator . • Install stator assembly to stator shaft • Install Snap ring (04064-09530)		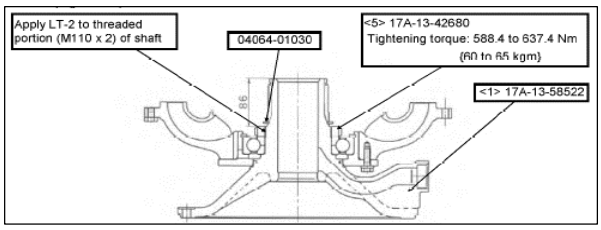 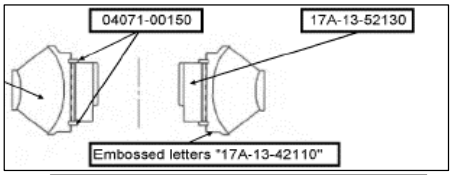 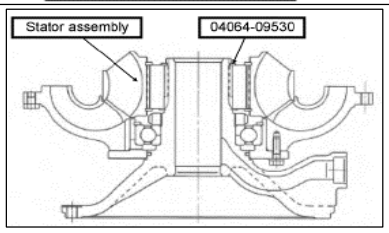

ASSEMBLY CHECK SHEET **TORQUE CONVERTER** D 155A-6	WO NUMBER		DOCUMENT NO	RC/QR04/PT/01/04
	COMP.MODEL		PUBLIC DATE	
	COMP.S/N		REVISION NO	4
	UNIT MODEL		PAGE	

4	**Case Turbin Assembly**	• Press fit inner race (4) and install snap ring(3) • Install input shaft (2). **Thread tightener (LT-2)** **Tightening bolt** Standart: **11.25 ± 1.25 Kgm** — Actual: • Using eyebolts [1], align groove of case with drain plug, and install case and turbine assembly (1). **Thread tightener (LT-2)** **Tightening bolt** Standart: **5.5 ± 0.5 Kgm** — Actual: • Install drain plug. **Tightening plug** Standart: **1.75 ± 0.25 Kgm** — Actual:			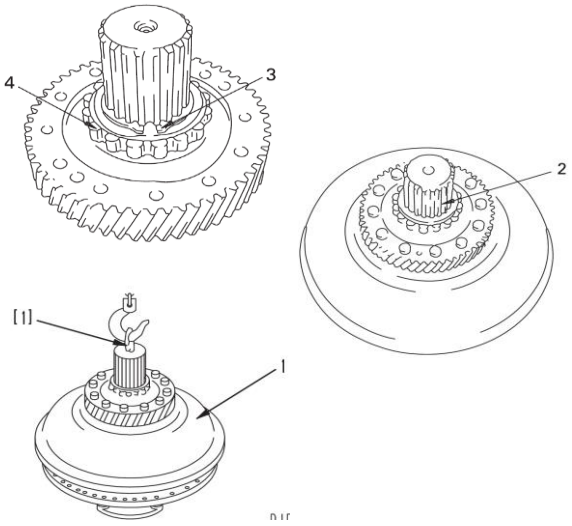

NOTE :

INSPECTION BY

MECHANIC

APPROVE BY

GROUP LEADER (GL)

PT SAPTAINDRA SEJATI

TRANSMISSION ASSEMBLY CHECKSHEET

MACHINE MODEL

D155A-6

RO NO :

POWERTRAIN SECTION

PT.SAPTA INDRA SEJATI
PLANT REBUILD CENTER

ASSEMBLY CHECK SHEET **TORQFLOW TRANSMISI** D 155A-6	WO NUMBER		DOCUMENT NO	
	COMP.MODEL		PUBLIC DATE	
	COMP.S/N		REVISION NO	
	UNIT MODEL		PAGE	

PROCESS	START		ASSEMBLY BY		
	FINISH				

NO	PART TO INSTALL OR ASSEMBLY	CONDITION TOBE INSTALL	MECH	GL/QA	SKETCH DRAWING OR PHOTHOES
1	Procedure assembly	**⚠ IMPORTANT ⚠** **Precautions when assembling** **a Clean all parts, and check for dirt or damage.** **a Coat the sliding surfaces of all parts with engine oil before installing.** **a Assemble the piston seal rings with the side receiving the pressure facing the housing as shown in the diagram.** **a When installing metal seal rings, coat with grease (G2-LI) and install uniformly, taking care that they do not move to one side.**			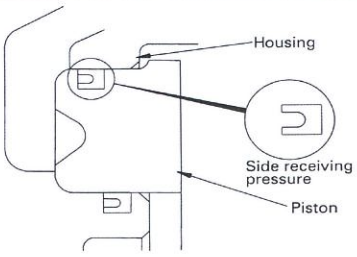
2	Cage Bearing	• Install seal rings (116) and (115), then install cage (114) to cover (109). • Press fit bearing (113), and install snap ring (112). • Press fit bearing (111), and install snap ring (110).			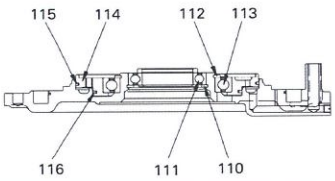
3	Shaft Collar	• Install shaft (107) and collar (108) to cover (109).			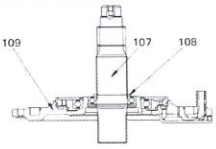
4	No 5 Clutch Pack	• Install No. 5 sun gear (105). • Install No. 5 ring gear (100). • Install No. 5 piston (106).			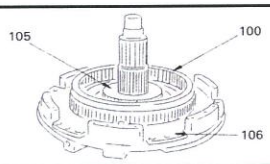
5	NO 5 Disc plate and Spring	• Install guide pin (83). • Install disc (97), plate (98), and spring (99). **a Discs: 3, Plates: 2** • Install spring (96). **a Free length of spring: 66 mm**			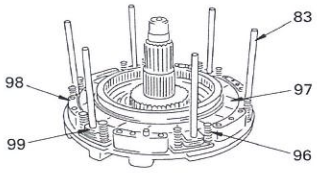
6	No 4 Housing Assembly	• Fit seal ring and install No. 4 piston (95). • Install No. 4 housing (94). **a Check that the spring is fitted securely in the groove.**			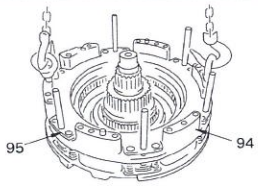
7	NO 5 Carrier and No 4 Ring Gear	• Set No. 4 ring gear (92) to carrier (93),and install snap ring (91). • Assemble bearing (89) to gear (88), then put thrust washers (87) in contact on both sides, and set in carrier. • Fit ball (90) and install shaft (86). • Using guide bolts [1], install No. 5 carrier and No. 4 ring gear assembly (85) **Thread tightener (LT-2)** **Tightening bolt** Standart: **6.75 ± 0.75 Kgm** Actual:			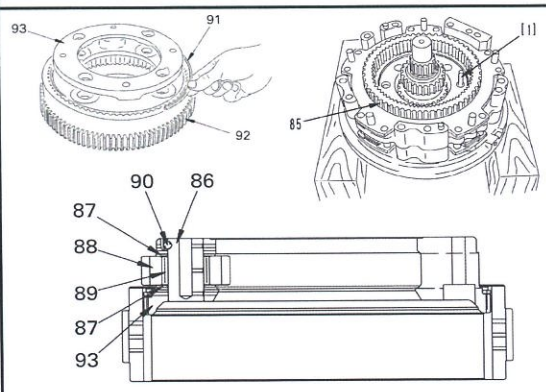

ASSEMBLY CHECK SHEET **TORQFLOW TRANSMISI** D 155A-6	WO NUMBER		DOCUMENT NO	
	COMP.MODEL		PUBLIC DATE	
	COMP.S/N		REVISION NO	
	UNIT MODEL		PAGE	

NO	PART TO INSTALL OR ASSEMBLY	CONDITION TOBE INSTALL	MECH	GL/QA	SKETCH DRAWING OR PHOTHOES
8	**No. 4 disc, plate, springs**	• Install No. 4 disc (81), plate (82), spring (80). **a Discs: 4, Plates: 3** • Install spring (79). **a Free length of spring: 70 mm**			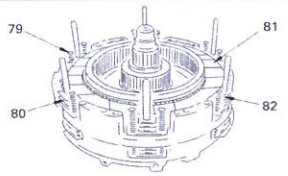
9	**No. 3 housing assembly**	• Fit seal ring and install No. 3 piston (78). • Install No. 3 housing (77). **a Check that the spring is fitted securely in the groove.**			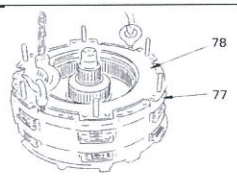
10	**No. 3, 4 carrier assembly**	• Press fit bearing (117), and install snap ring (118). • Assemble bearing (75) to No. 3 planet gear (74), then put thrust washers (73) in contact on both sides and set to carrier. • Fit ball (76), then install shaft (72). • Assemble bearing (71) to No. 4 planet gear (70), then put thrust washers (69) in contact on both sides and set to carrier. • Align shaft pin hole with carrier pin hole and install shaft (68). • Check that pin holes are aligned, then knock in pin (67). • Install seal ring (66). **Align sun gear and ring gear, then install No.3 and 4 carrier assembly (65) a Be careful not to get your fingers caught.**			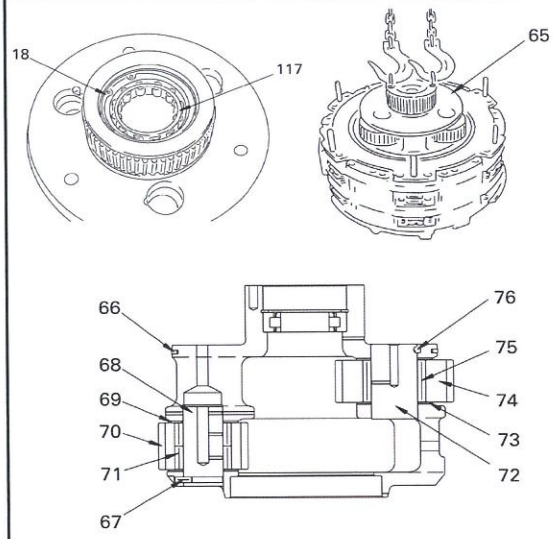
11	**No. 3 disc, plate, springs**	• Install No. 3 ring gear (64). **a Install so that the side with the notch in the outside teeth is facing down.** • Install disc (62), plate (63), and spring (61). **a Discs: 4, Plates: 3** • Install spring (60). **a Free length of spring: 70 mm**			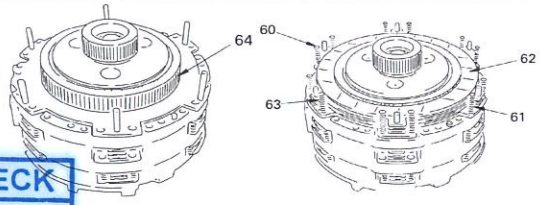
		• Press fit bearing (59) to No. 2 housing (46), and install snap ring (58). • Install seal ring (57). • Set ring gear (56) to No. 2 carrier (45), then install snap ring (55). • Assemble bearing (53) to gear (52), then put thrust washers (51) in contact on both sides, and set to carrier. • Fit ball (54) and install shaft (50). • Install seal ring. • Install No. 2 ring gear (48). • Install spacer (47). **a Install so that the side where the inside is cut is facing the carrier.** • Install No. 2 housing (46) to No. 2 carrier assembly (45). **a Press fit the inner race of the housing bearing** • Install snap ring (44). • Install No. 2 piston (43). • Using eyebolts [5], install No. 2 housing and No. 2 carrier assembly (42). **a Check that the spring is fitted securely in the groove.**			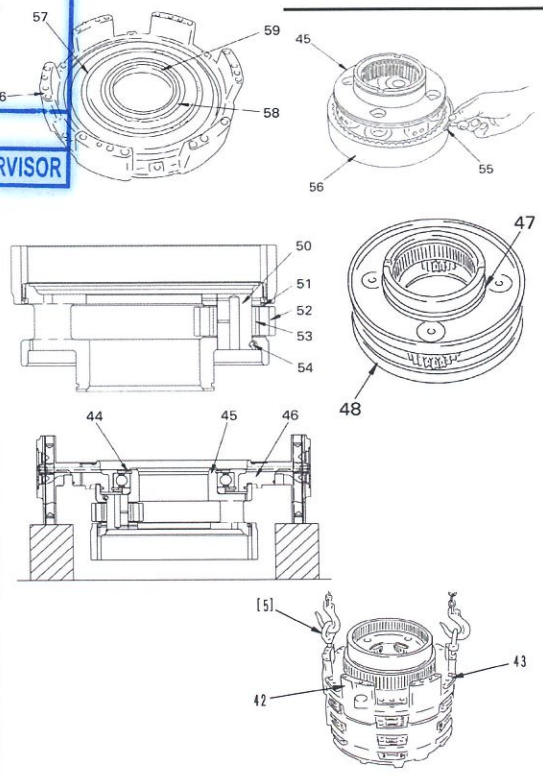

RANDOM ITEM CHECK

Name :	Name :
QA INSPECTOR	PROD. SUPERVISOR

ASSEMBLY CHECK SHEET **TORQFLOW TRANSMISI** D 155A-6	WO NUMBER		DOCUMENT NO	
	COMP.MODEL		PUBLIC DATE	
	COMP.S/N		REVISION NO	
	UNIT MODEL		PAGE	

NO	PART TO INSTALL OR ASSEMBLY	CONDITION TOBE INSTALL	MECH	GL/QA	SKETCH DRAWING OR PHOTHOES
13	**Lubricating Valve**	• Install through bolt guide (40), spring (120), and lubrication relief valve (41).			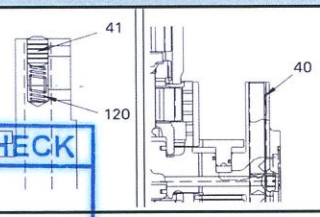
14	**No. 2 disc, plate, springs**	• Install guide pin (35). • Install No. 2 disc (38), plate (39), and spring (37). **a Discs: 5, Plates: 4** • Install spring (36). **a Free length of spring: 81.7 mm** • Fit seal ring and install No. 1 piston (34). • Using eyebolts [4], align with No. 2 piston, then install No. 1 housing assembly (33).a Push the housing and tap the dowel pin portion.			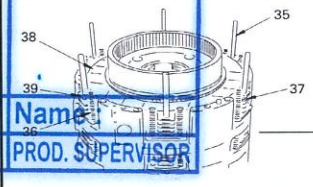 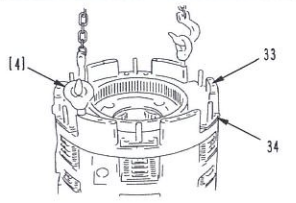
15	**Input shaft, No. 1 carrier assembly**	• Assemble bearing (27) to gear (26), then put thrust washers (25) in contact on both sides, and set to carrier. • Fit ball (28) and install shaft (24). • Set No. 1 ring gear (23) to No. 1 carrier,and install snap ring (22). • Press fit bearing (117) to input shaft (21). • Fit No. 1 carrier assembly (118) to input shaft (21), then install snap ring (18). • Install collar (17). • Install No. 1 sun gear (16), then install snap ring (15). • Install snap ring (14). • Install No. 2 sun gear (13), then install snap ring (12). • Raise input shaft, No. 1 carrier assembly (119), align meshing of No. 2 sun gear and No. 1 planet gear, then install.			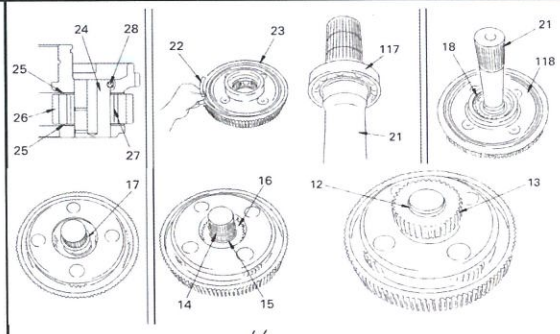 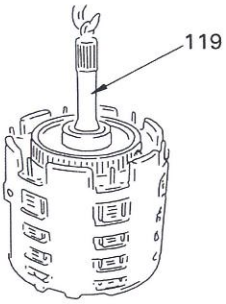
16	**No. 1 disc, plate, springs**	• Install No. 1 disc (31), plate (32), and spring (30). **a Discs: 5, Plates: 4** • Install spring (29). **a Free length of spring: 81.7 mm**			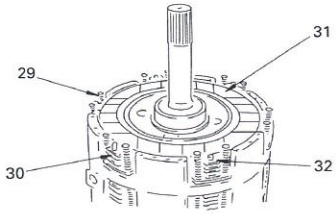

RANDOM ITEM CHECK

Name :	Name :
QA INSPECTOR	PROD. SUPERVISOR

ASSEMBLY CHECK SHEET **TORQFLOW TRANSMISI** D 155A-6	WO NUMBER		DOCUMENT NO	
	COMP.MODEL		PUBLIC DATE	
	COMP.S/N		REVISION NO	
	UNIT MODEL		PAGE	

NO	PART TO INSTALL OR ASSEMBLY	CONDITION TOBE INSTALL	MECH	GL/QA	SKETCH DRAWING OR PHOTHOES
17	Front cover	• Install seal ring (121) to front cover (122). • Using eyebolts [6], align front cover (122) • with guide pin and spring, then install. Press fit inner race end of bearing (123) to input shaft, then install snap ring (124). **a Check that the spring is fitted securely in the cover.** • Install 4 tie bolts (9). (The 4 bolts marked e in the diagram) **Tightening bolt** Standart: 17 ± 1 Kgm Actual:			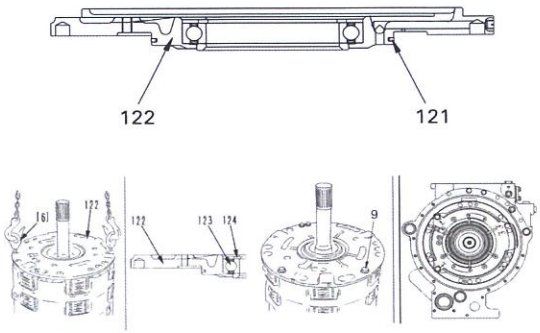
18	Test Leak	Piston / Standard stroke (mm) / Actual No. 1: 6 No. 2: 6 No. 3: 5 No. 4: 5 No. 5: 6		RANDOM ITEM CHECK Name : QA INSPECTOR Name : PROD. SUPERVISOR	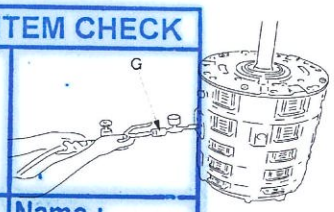
19	Transmission case	• Fit O-ring, then using eyebolts [2], install transmission case (8), and install remaining 13 tie bolts (9). **Gasket Sealant (LG-5)**			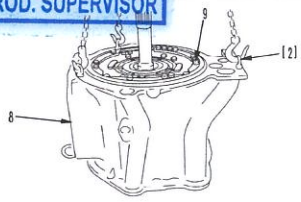
20	Control valve assembly	• Install control valve assembly (6). **Tightening bolt** Standart: 5.0 ± 0.5 Kgm Actual: Install flanges (4) and (5), and sleeve (3). • Install cover assembly (2) **Gasket Sealant (LG-5)** • Install main relief valve assembly (1) **Tightening bolt** Standart: 5.0 ± 0.5 Kgm Actual:			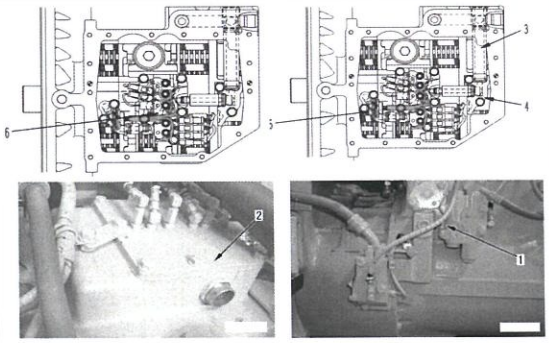

NOTE :

INSPECTION BY

MECHANIC

APPROVE BY

GROUP LEADER (GL)

PT SAPTAINDRA SEJATI

BEVEL GEAR ASSEMBLY CHECKSHEET

MACHINE MODEL

D155A-6

RO NO :

POWERTRAIN SECTION

PT.SAPTA INDRA SEJATI
PLANT REBUILD CENTER

ASSEMBLY CHECK SHEET **BEVEL GEAR ASSEMBLY** D 155A-6	WO NUMBER		DOCUMENT NO	RC/QR04/PT/01/03
	COMP.MODEL		PUBLIC DATE	
	COMP.S/N		REVISION NO	
	UNIT MODEL		PAGE	

PROCESS	START		ASSEMBLY BY		
	FINISH				

NO	PART TO INSTALL OR ASSEMBLY	CONDITION TOBE INSTALL	MECH	GL/QA	SKETCH DRAWING OR PHOTHOES
1	Bevel Gear Assembly	Assemble shim (56) and install cage (55). **a There are four types of shim: 0.05,0.1, 0.2, 0.5 mm** Actual: **Tightening bolt** Standart: 11.25 ± 1.25 Kgm Actual:			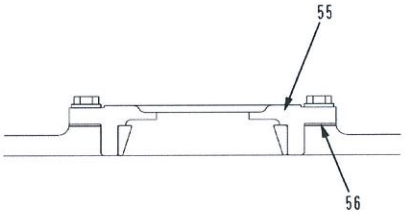
2	Bevel Gear Assembly	Set bevel gear (53) to bevel gear shaft (50), then fit reamer bolt (52) **Tightening Nut** Standart: 25 ± 3 Kgm Actual:			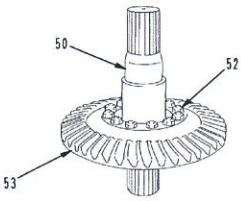
3	Bevel Gear Assembly	Assemble shim (47) and install cage (46). **a There are four types of shim: 0.05,0.1, 0.2, 0.5 mm** Actual: **Tightening bolt** Standart: 11.25 ± 1.25 Kgm Actual:			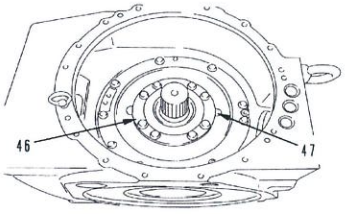
4	Bevel Pinion Assembly	Hold in press so that pinion does not move, then use tool H2 and tighten locknut (39) **Thread tightener (LT-2)** **Tightening Nut** Standart: 79.5 ± 8.5 Kgm Actual: **a Rotate the cage when tightening.**			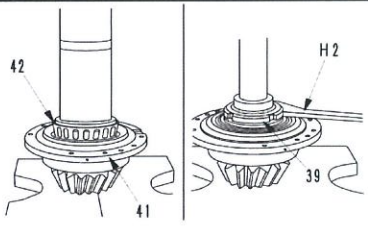
5	Bevel Pinion Assembly	Using guide bolt [12], assemble shim (38) and install bevel pinion assembly (37). **a There are four types of shim: 0.05, 0.1, 0.2, 0.5 mm** Actual: Mounting bolts of cage and bevel pinion assembly **Tightening bolt** Standart: 11.25 ± 1.25 Kgm Actual:			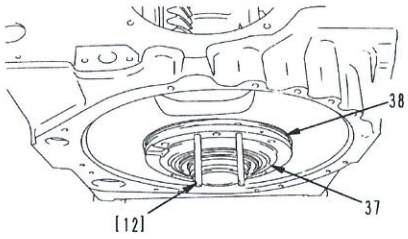
6	Adjustment Backlash	**a Standard backlash** Standart: 0.25 - 0.33 Actual: **a Measure the backlash diagonally at 3 or more places.**			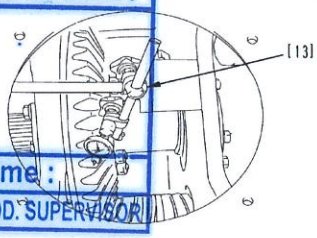

RANDOM ITEM CHECK

Name :	Name :
QA INSPECTOR	PROD. SUPERVISOR

PT.SAPTA INDRA SEJATI
PLANT REBUILD CENTER

ASSEMBLY CHECK SHEET **BEVEL GEAR ASSEMBLY** D 155A-6	WO NUMBER		DOCUMENT NO	
	COMP.MODEL		PUBLIC DATE	
	COMP.S/N		REVISION NO	
	UNIT MODEL		PAGE	

PROCESS	START		ASSEMBLY BY		
	FINISH				

NO	PART TO INSTALL OR ASSEMBLY	CONDITION TOBE INSTALL	MECH	GL/QA	SKETCH DRAWING OR PHOTHOES
7	**Adjustment Tooth Contact**	**The tooth contact must be as follows.** **(The standard distance is measured from the tooth tip of the bevel pinion.)** a) Center of tooth contact: 20 40% of face width (from small end) b) Width of tooth contact: 30 50% of face width c) Center of tooth contact: 35 65% of tooth depth d) Width of tooth contact: 60 80% of tooth depth Check that there is not a strong contact at tips (A), roots (B), small end (C) or large end (D). a If the bevel gear and bevel pinion are adjusted in this way, their teeth come in contact with each other correctly when they are loaded. RANDOM ITEM CHECK Name : QA INSPECTOR Name : PROD. SUPERVISOR			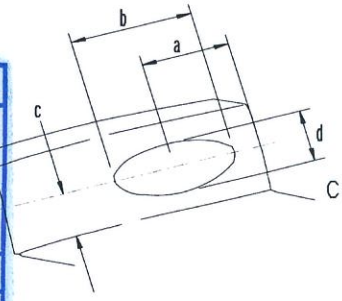
8	**Clutch Brake Assembly**	Install clutch outer drum (26) to brake hub (27 **Tightening bolt** Standart: 11.25 ± 1.25 Kgm Actual: **Thread tightener (LT-2)**			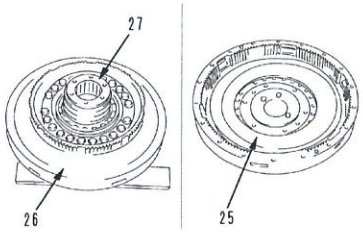
9	**Clutch Brake Assembly**	Assemble clutch piston (24). Fit seal ring and install cage (23) **Mark "A" in Cylinder piston must be syncron with plug not orifice in piston clucth (see a picture)** **Tightening bolt** Standart: 11.25 ± 1.25 Kgm Actual: **Thread tightener (LT-2)** RANDOM ITEM CHECK Name : QA INSPECTOR Name : PROD. SUPERVISOR			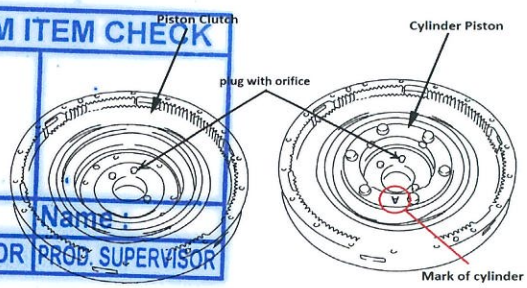
10	**Clutch Brake Assembly**	Assemble plate (18) and disc (17). a Assemble the plate to the piston end. Install cover (16). **a The cover is being pushed by the clutch spring** **Tightening bolt** Standart: 6.75 ± 0.75 Kgm Actual: **Thread tightener (LT-2)**			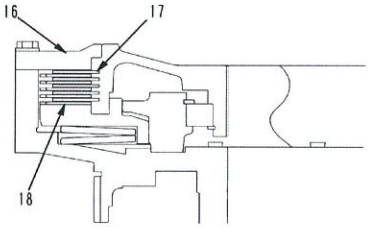
11	**Clutch Brake Assembly**	Set brake outer drum (12) to clutch outer drum. Assemble discs (13), plates (14)			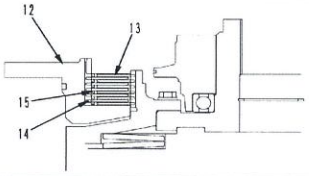
12	**Clutch Brake Assembly**	Install guide bolts [14] and [15] to brake piston (9) and brake cage (10) **a Guide bolt [14] is for releasing the brake.**			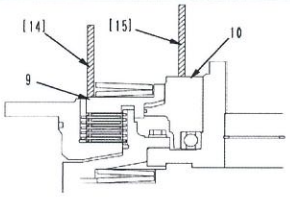

PT.SAPTA INDRA SEJATI
PLANT REBUILD CENTER

ASSEMBLY CHECK SHEET **BEVEL GEAR ASSEMBLY** D 155A-6	WO NUMBER		DOCUMENT NO	
	COMP.MODEL		PUBLIC DATE	
	COMP.S/N		REVISION NO	
	UNIT MODEL		PAGE	

PROCESS	START		ASSEMBLY BY		
	FINISH				

NO	PART TO INSTALL OR ASSEMBLY	CONDITION TOBE INSTALL	MECH	GL/QA	SKETCH DRAWING OR PHOTHOES
13	Clutch Brake Assembly	a Assemble the clutch and brake assembly on the opposite side in the same way Tightening bolt Standart: 6.75 ± 0.75 Kgm Actual:			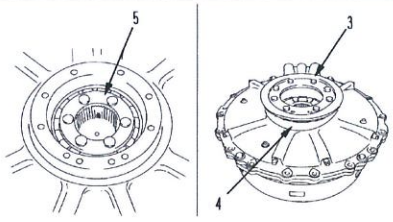

NOTE :

INSPECTION BY

MECHANIC

APPROVE BY

GROUP LEADER (GL)

PT.SAPTA INDRA SEJATI
PLANT REBUILD CENTER

CHECKSHEET TESTBENCH TRANSMISSION D155A-6

DOCUMENT NO	
PUBLICATION	
REVISION	
PAGE	

MACHINE	MODEL		TEST DATE	
	S/N		TEST BY	
T.CONVERTER	MODEL		USED OIL	SAE 30
	S/N		OIL TEMP	50° ± 5° C
TRANSMISSION	MODEL		FLOW RATE (Std)	INTERNAL FLOW
	S/N		FLOW RATE (Act)	
WO NO			RPM(Std)	740-780 RPM
			RPM(Act)	

DESCRIPTION	STANDARD (kg/cm2)	ACTUAL	REMARK
MAIN RELIEF	28.7 - 31.7		
TC INLET	4 - 6		
TC OUTLET	0.5 - 5		
LUB PRESSURE	0 - 1		

CLUCTH		1st	2nd	3rd	F	R	LU	STATOR	RC	LC	RB	LB
PRESSURE	STD	20,5 - 24,5	20,2 - 24,2	20 - 24	20 - 24	20 - 24	13-16	24.5-27.5	25,9 - 29,9	25,1 - 29,1	25,1 - 29,1	24,9 - 28,9
	ACT											
FILLING TIME	STD	0.5-1.5	0.2-12	0.3-0.5	0.3-1.1	0.3-1.5						
	ACT											

OIL LEAKAGE		EXCESSIVE HEAT		BREAKAGE / CRACK		ABNORMAL NOISE	
☐ YES	☐ NO	☐ YES	☐ NO	☐ YES	☐ NO	☐ YES	☐ NO

NOTE :

TEST BY	APPROVED BY
MEKANIK	QA / GL

PT SAPTAINDRA SEJATI

POWER MODULE DELIVERY CHECKSHEET

MACHINE MODEL

D155A-6

RO NO :

POWERTRAIN SECTION

PT.SAPTA INDRA SEJATI
PLANT REBUILD CENTER

DELIVERY CHECK SHEET	WO. NO		DOCUMENT NO	
POWER MODUL	COMP.S/N		PUBLIC DATE	
	INSPECTION DATE		REVISION NO	
D 155A - 6	PART NO. COMPONENT	17A - 15 - 51000	PAGE	

BELOW ARE THE ITEMS RELATED TO DELIVERY INSPECTION AND WHILE YOU DOING THIS INSPECTION JOB, PLEASE REFERRING TO THE REMANUFACTURED COMPONENTS - STANDARD CONFIGURATION.

✓ : GOOD CONDITION X : BAD CONDITION ⊗ : NONE

SKETCH DRAWING OR PHOTOES

Right Side View

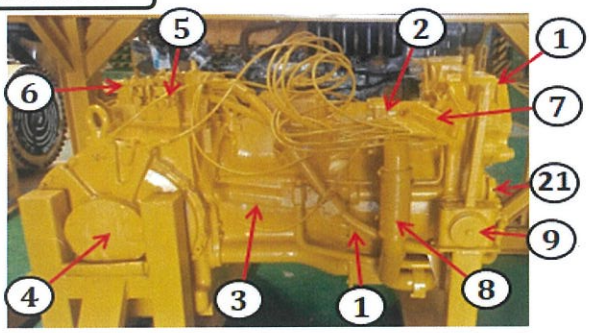

Left Side View

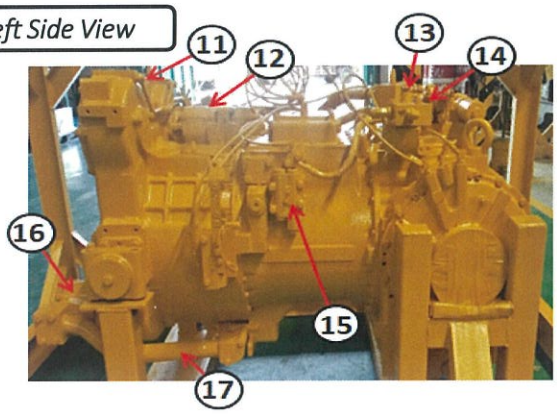

Rear Side View

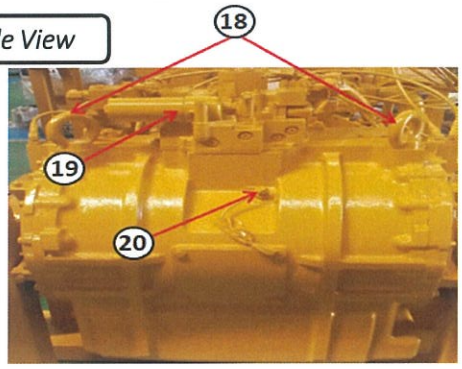

NOTE : PLEASE MARK " ✓ " FOLLOWING TO THE ACTUAL CONDITION

OIL LEVEL	EMPTY OR DRAINED	
	PROPER LEVEL	

NO	ITEM	CHECK	REMARK
1	PTO		
2	Torque Conventer		
3	Transmission		
4	Steering Brake RH & LH		
5	Sudden Brake Valve		
6	ECMV Brake		
7	Centralized Pick Up Port		
8	Piping & Hose Suction Pump		
9	Front Support		
10	Piping Supply		
11	Piping Lubrication PTO		
12	Power Train Pump		
13	Block Divider		
14	Steering ECMV		
15	Main Relief		
16	Scavenging Pump Assy		
17	Scavenging piping		
18	Lift Hanger (3pcs)		
19	Filter With Element Assy Steering Brake		
20	Revolution Sensor		
21	Coupling		
	Warning (Sticker)		
	Painting condition		
	Packing / wraping		
	Stand		
	Bolt stand		
	Delivery check sheet		
	Quality passed (Sticker)		
	Name Plate		

Note :

INSPECTION BY APPROVED BY

QA/GL QA COORDINATOR

PT SAPTAINDRA SEJATI

CONTROL VALVE ASSEMBLY

CHECKSHEET

MACHINE MODEL

D155A-6

RO NO :

POWERTRAIN SECTION

PT.SAPTA INDRA SEJATI
PLANT REBUILD CENTER

DISASSEMBLY CHECK SHEET **CONTROL VALVE** D 155A - 6	WO NUMBER		DOCUMENT NO	
	COMP.MODEL		PUBLIC DATE	
	COMP.S/N		REVISION NO	R 00
	UNIT MODEL		PAGE	1 of 6

PROCESS	START		DISASSEMBLY BY		
	FINISH				

NO	PART TO REMOVE OR INSPECT	CONDITION TOBE INSPECTED	REUSE	SALVAGE	REPAIR	SKETCH DRAWING OR PHOTHOES	REMARK
1	TORQUE CONVETER RELIEF VALVE DISASSEMBLY	**⚠ IMPORTANT ⚠** **Check the quantity and thickness of the shims check the chipping ,scrath or banding of the spoll valve check the crack and abnormal worn of the valve body check the tension and banding of the spring** • Remove plug (16) from body (1) • Remove piston (8) spring (10)and torque converter relief valve (7) from body (1) • Remove plug (14) from body (1) • Remove guide (15) shims (5) and spring from body (1) • Remove plug (2) from body (1) • Remove piston (9) spring (11) and main relief valve (6) from body (1) • Remove plug (3) from body (1) • Remove spring (12) (13) and shims from body (1)				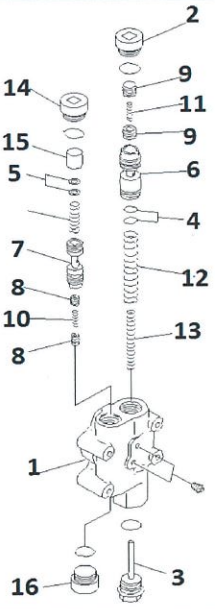	
2	TRANSMISI CONTROL VALVE DISASSEMBLY	**⚠ IMPORTANT ⚠** **Check the quantity and thickness of the shims check the chipping ,scrath or banding of the spoll valve check the crack and abnormal worn of the valve body check the tension and banding of the spring** • Remove filter assy (3) from body (1) • Remove filter (21) from housing filter (3) • Remove body (2) from body (1) • Remove bracket (6) and flow detector valve from body (2) • Remove spring (8) shims (9) from seat (10) • Remove pin (11) and valve (12) from body (2) • Remove solenoid (13) from body (1) • Remove valve (14) and ball (15) from solenoid (13) • Remove valve (16) shims (17) and spring (18) from body (1)				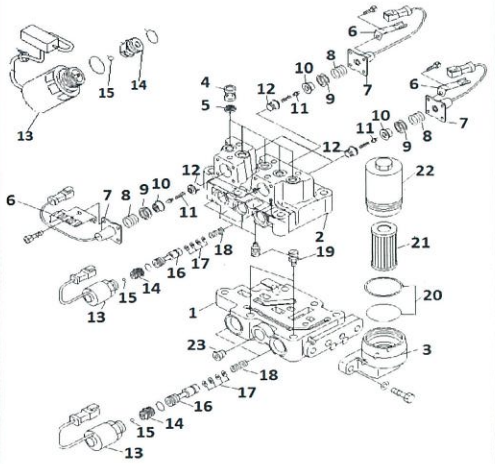	
3	STERING AND BRAKE CONTROL VALVE DISASSEMBLY	• Remove filter assy (3) and plug (11) from valve seat (1) • Remove sudent stop ECMV(5) from valve seat (1) • Remove ECMV assy (5) from valve seat (1) • Remove solenoid valve (10) from body (4) and than Remove body (4) from vave seat (1) • Remove cover (14) spring (15) and valve (16) from valve seat (1) • Remove fitting (6) plug (8) and plug (9) from valve seat (1) • Remove orifice (12) (13) from valve seat (1)				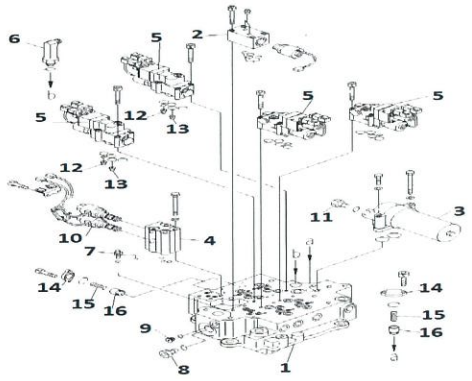	

PT.SAPTA INDRA SEJATI
PLANT REBUILD CENTER

DISASSEMBLY CHECK SHEET **CONTROL VALVE** D 155A - 6	WO NUMBER		DOCUMENT NO	
	COMP.MODEL		PUBLIC DATE	
	COMP.S/N		REVISION NO	R 00
	UNIT MODEL		PAGE	2 of 6

PROCESS	START		DISASSEMBLY BY		
	FINISH				

NO	PART TO REMOVE OR INSPECT	CONDITION TOBE INSPECTED	REUSE	SALVAGE	REPAIR	SKETCH DRAWING OR PHOTHOES	REMARK
4	STERING AND BRAKE ECMV DISASSEMBLY	**⚠ IMPORTANT ⚠** **Keep the removed parts so that they will not be damaged.Examine valve body (2) and spool (22) as well as spring (24)for the existancecof plating film pieces and other metalic particles Check the quantity and thickness of the shims check the chipping ,scrath or banding of the spoll valve check the crack and abnormal worn of the valve body check the tension and banding of the spring** • Remove solenoid (14) and spool (22) from valve body (2).a When disassembling the valve, check that the spool moves smoothly • Remove bracket (5) and flow detector assembly(7). • Remove spring (24) and shims (23) .a Check the quantity and thickness of the shims • Remove seat (10), spring (8)(9) and pin (11).spring (12) and spool (13) from body(2) • Remove plug (3) and orifice (4) from body (2)				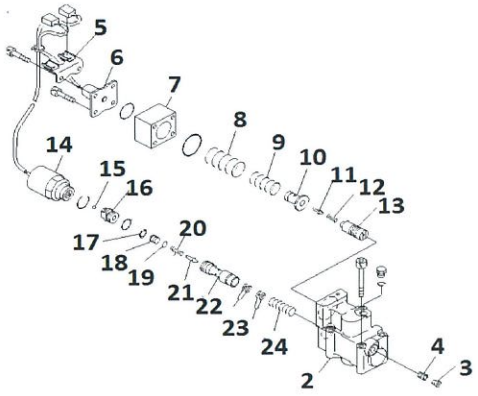	

NOTE

INSPECTION BY

MECHANIC

APPROVE BY

GROUP LEADER (GL)

PT SAPTAINDRA SEJATI

CONTROL VALVE MEASUREMENT CHECKSHEET

MACHINE MODEL

D155A-6

RO NO :

POWERTRAIN SECTION

PT.SAPTA INDRA SEJATI
PLANT REBUILD CENTER

MEASUREMENT CHECK SHEET **CONTROL VALVE** D 155 - 6	WO NUMBER		DOCUMENT NO	
	COMP.MODEL		PUBLIC DATE	
	COMP.S/N		REVISION NO	R 00
	UNIT MODEL		PAGE	3 of 6

PROCESS	START		MEASUREMENT BY		
	FINISH				

NO	PART TO MEASURING OR INSPECT	STANDARD VALUE TABLE
1	TORQUE CONVETER RELIEF VALVE ASSEMBLY	

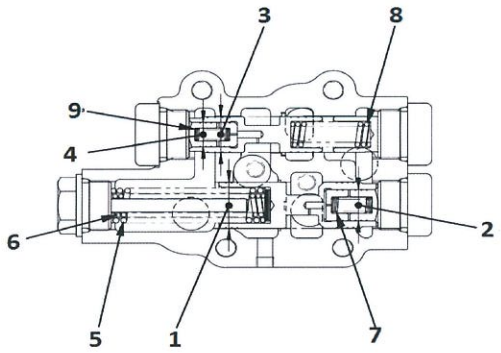

Unit: mm

No.	Check item	Criteria					Actual
		Standard size	Tolerance		Standard clearance	Clearance limit	
			Shaft	Hole			
1	Clearance between main relief valve and valve body	28	–0.035 –0.045	+0.013 0	0.035 – 0.058	0.08	
2	Clearance between main relief valve and piston	19	–0.020 –0.030	+0.018 0	0.020 – 0.048	0.07	
3	Clearance between torque converter relief valve and valve body	22	–0.035 –0.046	+0.013 0	0.035 – 0.068	0.08	
4	Clearance between torque converter relief valve and piston	15	–0.020 –0.030	+0.021 0	0.020 – 0.051	0.07	
		Standard size			Repair limit		
5	Main relief valve outside spring	Free length	Installed length	Installed load	Free length	Installed load	
		128	75.3	481N {49kg}	124.2	483.5N {49.3kg}	
6	Main relief vavle inside spring	108	75.3	401.8N {41.0kg}	104.8	382.5N {39.0kg}	
7	Main relief valve piston spring	30	25	7.32N {0.746kg}	29.1	6.96N {0.71kg}	
8	Torque converter relief valve spring	50	42	153N {15.6kg}	48.5	145.1N {14.8kg}	
9	Torque converter relief valve piton spring	26	20	4.87N {0.497kg}	25.2	4.61N {0.47kg}	

NOTE

INSPECTION BY

MECHANIC

APPROVE BY

GROUP LEADER (GL)

PT SAPTAINDRA SEJATI

CONTROL VALVE ASSEMBLY

CHECKSHEET

MACHINE MODEL

D155A-6

RO NO :

POWERTRAIN SECTION

PT.SAPTA INDRA SEJATI
PLANT REBUILD CENTER

ASSEMBLY CHECK SHEET **CONTROL VALVE** D 155A - 6	WO NUMBER		DOCUMENT NO	
	COMP.MODEL		PUBLIC DATE	
	COMP.S/N		REVISION NO	R 00
	UNIT MODEL		PAGE	4 of 6

PROCESS	START		ASSEMBLY BY		
	FINISH				

NO	PART TO INSTALL OR ASSEMBLY	CONDITION TOBE INSTALL	MECH	GL/QA	SKETCH DRAWING OR PHOTHOES
1	TORQUE CONVETER RELIEF VALVE ASSEMBLY	**⚠ IMPORTANT ⚠** **a Clean all parts, and check for dirt or damage.Coat the sliding surfaces of all parts with engine oil before installing.a Check the thickness and number of shims when assembling.Standard shim thickness: 0.5 mm** • Assemble spring (7) and guide (9) to t/c spool valve (16) • Assemble piston valve (3), spring (4), and piston valve (5) to t/c spool valve (6), then assemble to valve body (1),and install plugs (2) and (10). **Tightening plug (2) and (10)** Standard: 6.5 ± 0.5 kgm — Actual: • Assemble springs (18) and (17) to plug (19), and install to valve body (1). • Assemble piston valve (12), spring (13), and piston valve (14),then assemble to main relief valve (15) and install shim (16) on opposite side. • Assemble main relief valve (15) to valve body (1), and install plug (11). **Tightening plug (19) and (11)** Standard: 6.5 ± 0.5 kgm — Actual:			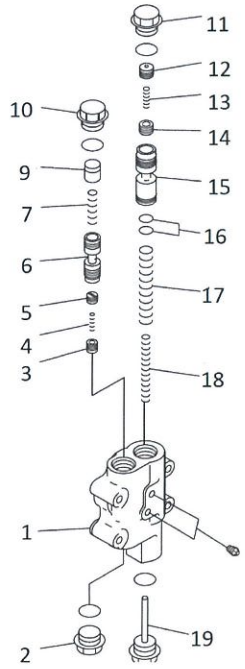
2	TRANSMISI CONTROL VALVE ASSEMBLY	**⚠ IMPORTANT ⚠** **Inspect each part thoroughly and confirm that the part is free fromdirt/dust, scratches. Be certain to reassemble all spools and plungers into their original valve body bores.a When installing the spool, check that it moves smoothly.** **Standard number of shims: 3** **Standard shim thickness: 1.5 mm** **(Thickness of 1 shim: 0.2 mm, 0.5 mm)** • install ball (15) valve (14) and plug (26) fit O-Ring to solenoid (13) **Tightening valve (14)** Standard: 2.0 ± 0.2 Kgm — Actual: • Install shims (17) and spring (18) to spool (16), and then install the spool to body (1) (2) **Tightening solenoid** Standard: 5.0 ± 0.5 kgm — Actual: • Install sleeve (12)(10), pin (11), to valve body (2). • Install shim (9) and spring (8) to spring seat (10) • Install switch assembly (7) and bracket (6) to valve body (2). **Tightening bolt (19)** Standard: 0.5 ± 0.2 kgm — Actual: Install filter assy (3) to body (1) **Tightening bolt** Standard: 6.5 ± 0.5 kgm — Actual:			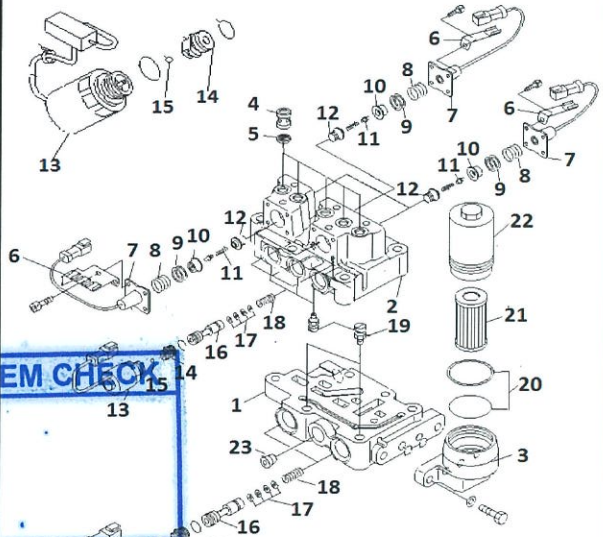

RANDOM ITEM CHECK

Name :	Name :
QA INSPECTOR	PROD. SUPERVISOR

PT.SAPTA INDRA SEJATI
PLANT REBUILD CENTER

ASSEMBLY CHECK SHEET **CONTROL VALVE** D 155A - 6	WO NUMBER		DOCUMENT NO	
	COMP.MODEL		PUBLIC DATE	
	COMP.S/N		REVISION NO	R 00
	UNIT MODEL		PAGE	5 of 6

PROCESS	START		ASSEMBLY BY		
	FINISH				

NO	PART TO INSTALL OR ASSEMBLY	CONDITION TOBE INSTALL	MECH	GL/QA	SKETCH DRAWING OR PHOTHOES
3	STERING AND BRAKE ECMV ASSEMBLY	**⚠ IMPORTANT ⚠** **Inspect each part thoroughly and confirm that the part is free fromdirt/dust, scratches. Be certain to reassemble all spools and plungers into their original valve body bores.a When installing the spool, check that it moves smoothly.** • Install plug (3) and orifice (4) to body (2) • Install seat (10), spring (8)(9) and pin (11).spring (12) and spool (13) to body(2) • Install bracket (5) and flow detector assembly(6).to body (2) Tightening bolt Standard: 0.5 ± 0.2 kgm — Actual: • Install spring (24) and shims (23) .a Check the quantity and thickness of the shims • Install solenoid (14) and spool (22) to valve body (2).a When assembling the valve, check that the spool moves smoothly Tightening valve (14) Standard: 2.0 ± 0.2 Kgm — Actual: Tightening solenoid Standard: 5.0 ± 0.5 kgm — Actual:			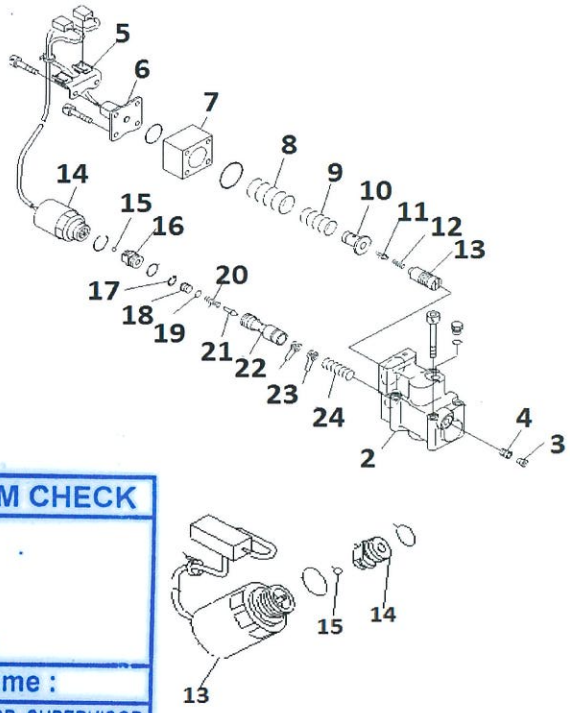
4	STERING AND BRAKE ECMV ASSEMBLY	• Install filter assy (3) and plug (11) to valve seat (1) Tightening filter (3) Standard: 4.0 ± 0.5 kgm — Actual: Tightening plug (11) Standard: 1.8 ± 0.2 kgm — Actual: Tightening bolt filter Standard: 6.5 ± 0.5 kgm — Actual: • Install sudent stop ECMV(2) to valve seat (1) Tightening bolt Ecmv Standard: 0.9 ± 0.1 kgm — Actual: • Install orifice (12) (13) to valve seat (1) • Install ECMV assy (5)to valve seat (1) Tightening bolt Ecmv Standard: 0.9 ± 0.1 kgm — Actual:			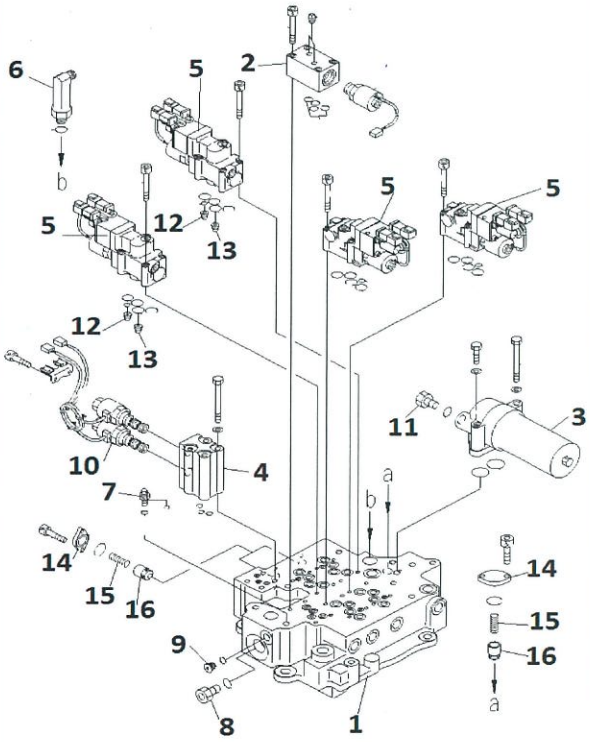

RANDOM ITEM CHECK

Name :	Name :
QA INSPECTOR	PROD. SUPERVISOR

PT.SAPTA INDRA SEJATI
PLANT REBUILD CENTER

ASSEMBLY CHECK SHEET **CONTROL VALVE** D 155A - 6	WO NUMBER		DOCUMENT NO	
	COMP.MODEL		PUBLIC DATE	
	COMP.S/N		REVISION NO	R 00
	UNIT MODEL		PAGE	6 of 6

PROCESS	START		ASSEMBLY BY		
	FINISH				

NO	PART TO INSTALL OR ASSEMBLY	CONDITION TOBE INSTALL	MECH	GL/QA	SKETCH DRAWING OR PHOTHOES
4	STERING AND BRAKE ASSEMBLY	• Install solenoid valve (10) to body (4) and than install body (4) to vave seat (1) **Tightening bolt body (4)** Standard: 2.3 ± 0.2 kgm — Actual: **Tightening solenoid** Standard: 5.0 ± 0.5 kgm — Actual: • Install cover (14) spring (15) and valve (16) to valve seat (1) **Tightening bolt cover (14)** Standard: 1.3 ± 0.1 kgm — Actual: • Install fitting (6) plug (8) and plug (9) to valve seat (1)			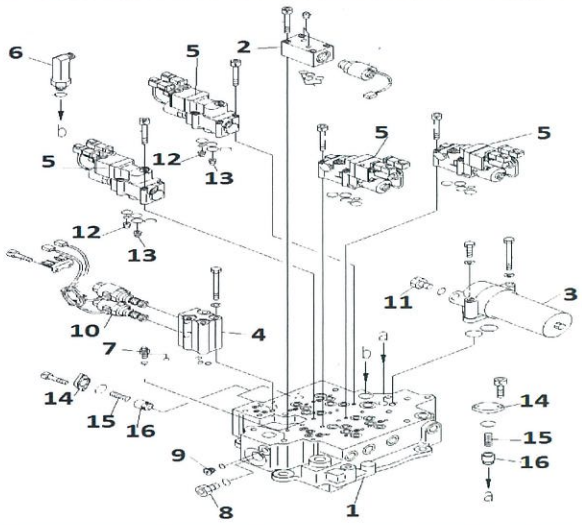

NOTE

INSPECTION BY

MECHANIC

APPROVE BY

GROUP LEADER (GL)